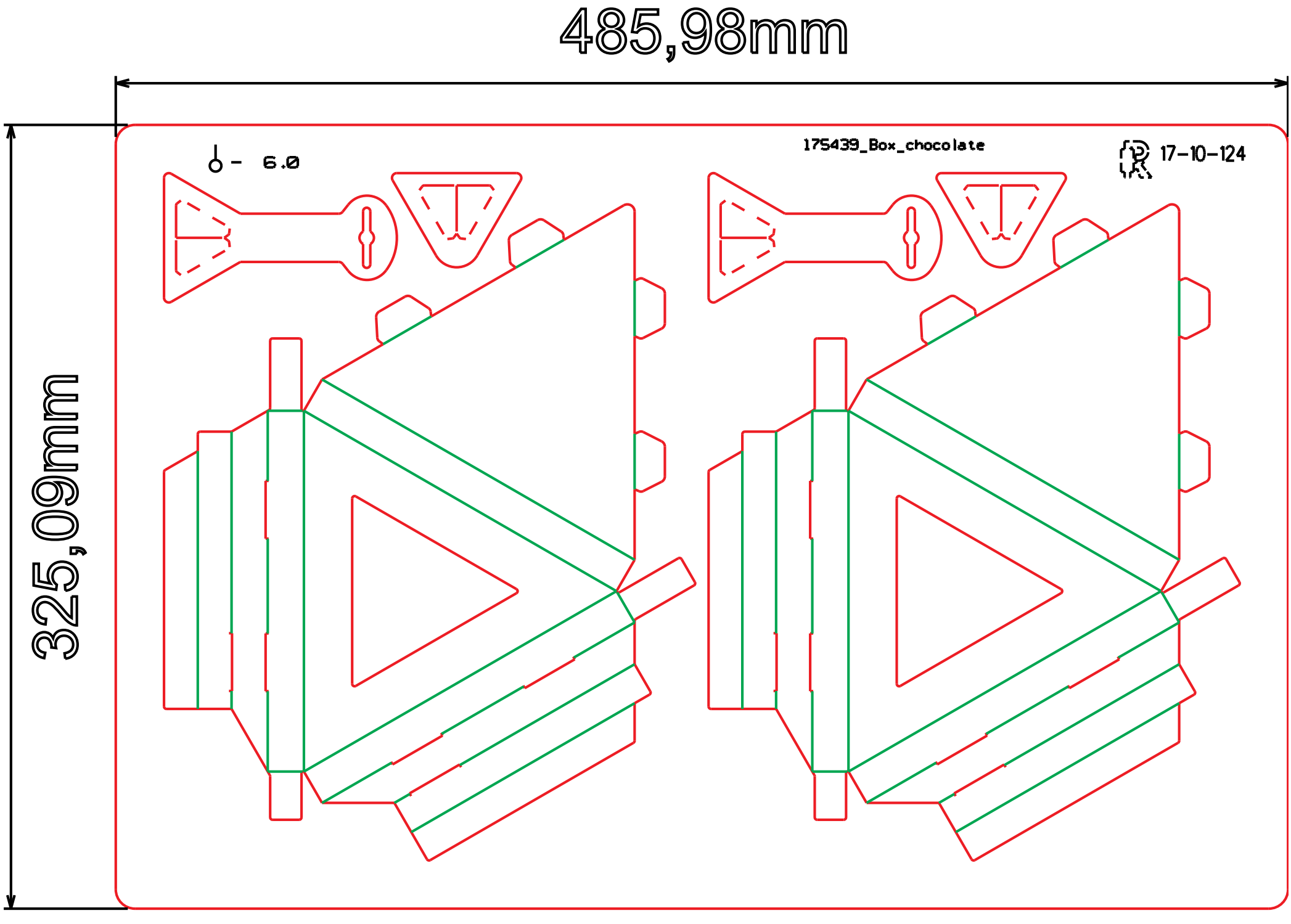
485,98mm
325,09mm
- 6.0
175439_Box_chocolate
17-10-124